Cornering

Lesson 2: A Bicycle or Scooter Model

Australian Curriculum: Mathematics (Year 8-10A)

ACMMG197: Investigate the relationship between features of circles such as circumference, area, radius and diameter. Use formulas to solve problems involving circumference and area. (Year 8)

ACMMG222: Investigate Pythagoras' Theorem and its application to solving simple problems involving right angled triangles. (Year 9)

ACMMG224: Apply trigonometry to solve right-angled triangle problems. (Year 9)

ACMMG272: Prove and apply angle and chord properties of circles. (Year 10A)

Lesson abstract

Students use a bicycle or scooter to find the space covered when it turns a corner. They walk the bicycle in an arc, discovering that the rear wheel travels along an arc of smaller radius than the front wheel. They draw a diagram of the experiment (from above) to understand the geometry of the situation, and identify the centre of rotation. Students apply Pythagoras' theorem to confirm that their diagram matches the results of the experiment.

Mathematical purpose (for students)

To use a physical model with wheels to investigate the space required when a vehicle turns a corner.

Mathematical purpose (for teachers)

The lesson offers an opportunity for students to design their own experiment to observe the space required by a turning bicycle. Later, in analysing the situation, students apply geometry of circles and triangles. They combine their observations about centre of rotation with knowledge of Pythagoras' theorem to find a relationship between the wheelbase of the vehicle and the path radii of its front and rear wheels. An alternative uses sine and tangent functions to find path radii from the wheelbase and the angle through which the handlebars are turned.

Lesson Length 60 minutes approximately

Vocabulary Encountered

- Wheelbase, axle
- Tangent
- Arc
- Concentric
- Centre of Rotation

Lesson Materials

- 1 scooter/bicycle/toy for each group, with steerable front wheel(s)
- Chalk, or marker pens (at least 1 per group)
- String (3-4 metres per Version 2 group)
- Tape measures (1 per group, 5-8m or1.5m depending on size of circles)
- Masking tape (1 roll per group)
- Full water bottle, as a weighted marker (1 per Version 2 group)
- Slide show *ST7_Cornering_2a_A_Better_Model.pptx*
- Student Sheet 1 – Bicycle Experiment (1 per group)
- Video *ST7_Cornering_2b_Bicycle_Experiment.mp4* (optional)

We value your feedback after these lessons via https://www.surveymonkey.com/r/J8GPD7Z

Mathematics by Inquiry is an initiative of, and funded by, the Australian Government Department of Education and Training

Australian Academy of Science

aamt

Lesson structure

Bicycle Experiment (small groups – 30 minutes)
Geometry of the Bicycle Model (class discussion – 10 minutes)
Finding Relationships Between the Lengths (small groups – 15 minutes)
The Modelling Cycle (class discussion – 5 minutes)

Bicycle Experiment

The aim of the experiment is to find the space covered by a bicycle or scooter as it travels around in a circle. Students will be choosing one of two versions of this experiment, and then planning the details in groups. Groups of about 3 students are recommended to have enough people to do and check everything.

Afterwards, they will draw a diagram (a 'bird's eye view') which will link strongly to the GeoGebra model they will meet in the next lesson.

It is important to understand that we are using the bicycle (or scooter or toy motor bike or car) as a physical model of the turning vehicle. We make a diagram (model) of the bicycle's path, as an indication of the paths of two wheels of a bus, and next lesson meet a GeoGebra model of the same paths. In each case, we will later use these models to make inferences about long vehicles like buses and trucks.

> *VERSION 1 – ANGLE EXPERIMENT: Turn the front wheel by a fixed amount, then walk the bike (in the direction of the front wheel) and see what happens with the rest of the bike.*
>
> *VERSION 2 – RADIUS EXPERIMENT: Draw an arc on the ground in chalk. Place the front wheel on this arc, the walk the bike around, keeping the front wheel on the arc, and see what happens.*

If enough space is not available, the experiment can be done with a toy car or motor bike on butcher's paper, as pictured below. Some 'vehicles' will be better suited to having their wheel/s fixed in position for Version 1.

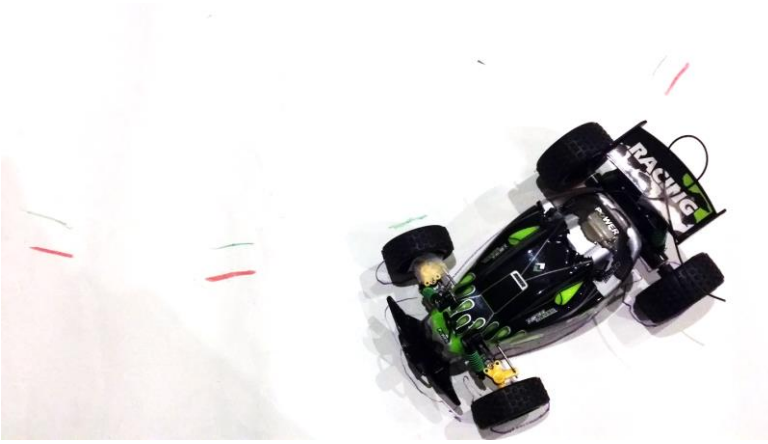

Toy car with front wheels taped into position, and a series of wheel positions marked (red front, green back). (Version 1)

Bicycle being walked around a pre-drawn chalk circle. (Version 2)

Scooter with front wheel taped into position. The wheel paths were made with water, and then traced in chalk. (Version 1)

Introducing the experiment

Slide show *ST7_Cornering_2a_A_Better_Model.pptx* Slides 1-5 can be used to introduce the experiment. There are no pictures in these slides so that students have to think through how to perform the experiment. If preferred, a less open approach could be taken, with full instructions given to students. For your convenience, copies of all the photos in this lesson plan are included at the end of the slideshow (Slides 12 – 18).

- *The aim of the experiment is to find where a bike (or scooter/toy car) goes as it travels around a corner.*
- *We are using a bicycle to learn about bigger vehicles. What are some of the differences between a bicycle and a bus?* (Buses have 4 wheels so are wider, a bicycle steers by leaning as well as turning the handlebars)
- *How can we make our bicycle more like a bus or truck?* (We should keep the bicycle upright and walk it around the corner, not ride it; we could add width to the bike, but it is better to save that idea for later!)
- *We also wanted to know how drivers steer around a corner. How do they know how far to turn the steering wheel?*
    - Turn the wheel to about the right place, hold it there for the turn, adjusting a little if needed.
    - Follow the 'line' or 'arc' of the corner, adjusting the steering wheel as required (i.e. responding to feedback).
- *How could we model these different approaches?*

  VERSION 1 – ANGLE EXPERIMENT: Turn the front wheel by a fixed amount, then walk the bike (in the direction of the front wheel) and see where the rest of the bike goes.

  VERSION 2 – RADIUS EXPERIMENT: Draw a circular arc on the ground in chalk. Walk the front wheel of the bike around the arc, and see where the rest of the bike goes.

Students pick (or are assigned) Version 1 or Version 2, and have a quick go. This could be done quickly with a scooter in front of the whole class. This shows students what room they will need, what needs to be marked, etc.

Students then need to plan exactly what their experiment will be, what they will need, what they will record (mainly the path that the wheels travel) and what to measure (e.g. the 'cut-in', the path radii).

Planning the experiment

Student Sheet 1 – Bicycle Experiment contains a few instructions and space for students to plan their experiment. You might also offer some suggestions as follows.

Marking the paths:

- Wet wheels will leave marks on a smooth surface such as a hallway. Before drying, measure or chalk over. Wet the wheels only when ready, not for initial trials – otherwise there will be a confusion of wet paths.
- Chalk marks work well on asphalt – one person with chalk for each wheel.

Version 1: Fixed front wheel angle.

- More difficult than Version 2, but good for the class to see because it does not assume a circular path.
- Getting a circular path with a bike may require some skill in keeping the handlebars fixed. A scooter is easier than a bike for this. To keep the front wheel of a scooter at exactly the same angle throughout the experiment, it can be taped in place firmly. A toy car can be similarly taped.
- With the angle fixed, the front wheel will move in a circle, and the back wheel will make a smaller concentric circle. Students will need to find the centre of these circles (confirming they are the same) and measure the radii.
- Finding the centre of the circle or measuring a diameter can be tricky, especially for a large circle. Draw two chords 'that intersect at right angles on the circle', and then join the other ends of the chords. This gives the diameter, as shown in the diagram. (Angle in a semicircle theorem.)

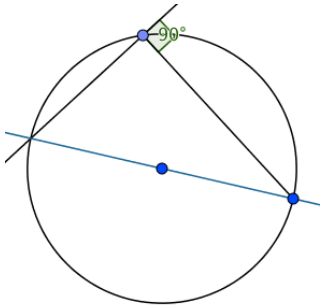

- If it is not possible to find the centre (e.g. if the path has not made enough of a circle), at least measure the distance between the path of the back wheel and the path of the front wheel, i.e. the amount the wheel cuts in by.
- The mathematics following from this version may be more complicated (involving sine ratios), although Pythagoras' theorem can be used instead.

Version 2: Fixing radius and following the arc.

- Students use string and piece of chalk to draw a large circle (around 1-2m radius for a bicycle). A full water bottle can be used to mark the centre, with the string tied around the neck.
- While not all real corners are circular arcs, using a full circle helps students see the centre of rotation, and matches with the models in following lessons.
- On the other hand, starting with a different curve will still show the rear wheel cutting in, and will aid in generalizing the result. If one group chooses to not use a circle, this will add to the discussion.
- Students may be unsure where to place the back wheel to start. If the back wheel is placed on the circle, it will have to skid/skip sideways to get to its natural position. This may be preferable, however, to starting with the back wheel inside the chalk circle, as this seems to preempt the outcome.
- The back wheel will follow a smaller concentric circle. Students will need to measure the radii of the circles and the distance the back wheel 'cuts in'.
- The video *ST7_Cornering_2b_Bicycle_Experiment.mp4* may be helpful if students are unsure what to do. (The video is of Professor Hugh Burkhardt, from the Shell Centre, University of Nottingham.)

Measurements:

- Students will probably not know in advance which measurements are most relevant. Encourage them to measure anything they think might be important.
- The measurements that are relevant to the model/s for next lesson are:
    - The path radius for each wheel (the difference between these is the 'cut-in' distance).
    - The 'cut-in' distance.
    - The wheelbase of the bike or scooter: this is the distance between the two wheels (specifically, the distance between the points where the wheels contact the road – or the distance between the axles). If students neglect to measure this, it can be done later when they realise it is important.
    - The angle of the front wheel (for version 1)
- It is a good idea to take more than one measurement, or to have another person check the measurement.
- Measuring to the nearest centimetre is sufficient.

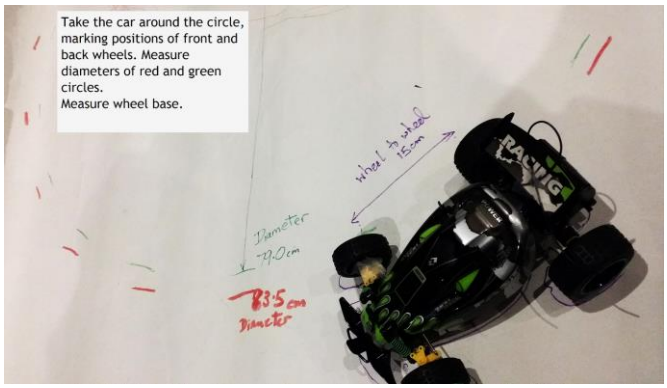

Measuring diameters and wheelbase

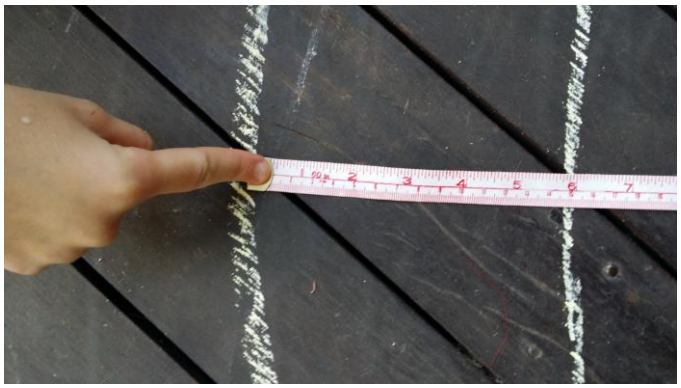

Measuring the 'cut-in' distance

Measuring the wheelbase

Drawing the angle through which wheels were turned

Drawing a diagram

Students express their results as a diagram (a 'bird's eye view' is best, as it shows the circles).

Students' diagrams will vary significantly, and some will be more mathematical than others. The aim here is to develop students' understanding of the bike model's geometry, so that they can more easily use the dynamic geometry model that they will meet in the next lesson.

Geometry of the Bicycle Model

Have several students share their diagrams (e.g. take photos and display on the board). (Slide 6)

Some points to note when students are sharing their diagrams:

- Concentric circles or arcs with radii marked
- 'Cut-in' distance marked
- Wheels drawn tangent to their path (this is how wheels generally behave – at each instant they are rolling in the direction they are pointing).
- Measure of angle of front wheel included for Version 1.
- Rear wheel in line with (parallel to) the bicycle body
- Bicycle body at right angles to the radius drawn from the rear wheel (this is unlikely to appear at this point!) (Theorem: a tangent is perpendicular to the radius.)

Some very good examples are shown below:

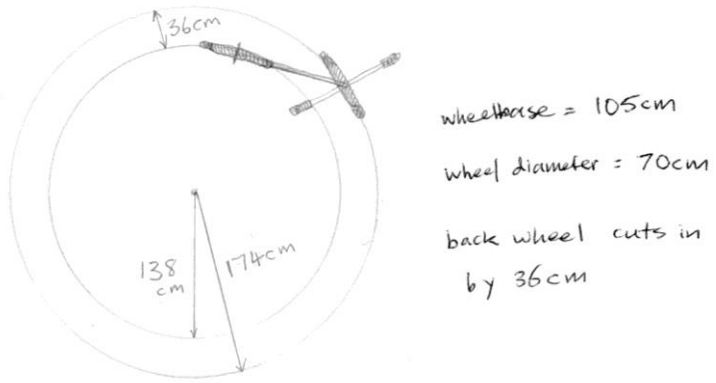	Version 2: Following an arc of radius 174 cm • Concentric circles with radii marked • 'Cut-in' distance marked • Wheels drawn tangent to their paths • Rear wheel in line with (parallel to) the bicycle body • Wheel base measured (distance between wheel centres)
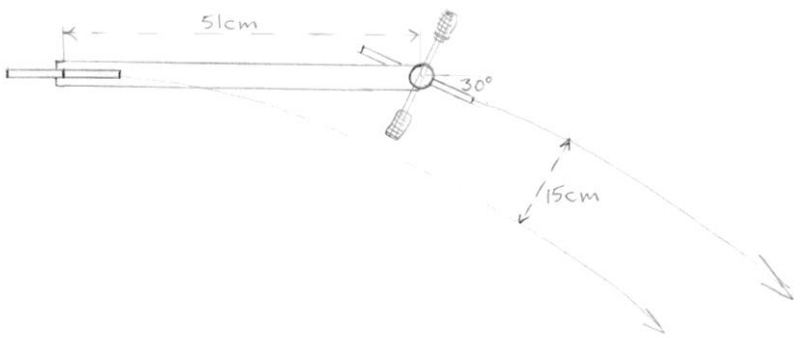	Version 1: Fixed front wheel angle (30°) • 'Cut-in' distance marked • Wheels drawn tangent to their path • Fixed angle of front wheel to body measured • Rear wheel in line with (parallel to) the bicycle body • Wheel base measured • (radii not given – perhaps a centre was not found)

Class discussion

What have we learned from the experiments about the space required for vehicles of different dimensions, and travelling along circles of different radii?

- The points listed above are useful here (shown on Slide 7). These features can be part of a general model.
- A crucial characteristic that the diagrams should have in common is that the two circles of the front and back wheels have the same centre. This is called the 'centre of rotation' for the bicycle: the whole bicycle rotates around this point. It is worth explaining this to students: *we can find the point that the bike will rotate around just by looking at the angle of the wheels*. If we draw a line along the axle of each wheel (i.e. perpendicular to the wheel) and find where these lines intersect, we have found the centre of rotation. Slide 8 includes this diagram. The predicted paths of the wheels can be drawn on this slide, by sketching the circles.

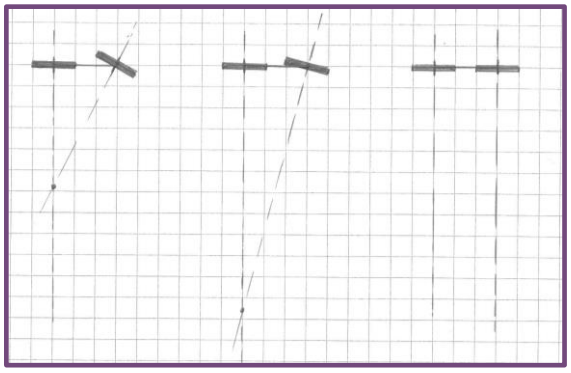

Centre of rotation for three sets of wheels. In the final example, there is no intersection and no rotation.

- Students may want to include the diameter of the wheels in their model. While wheel size affects many aspects of a vehicle, it is not relevant here; only the direction of the wheel matters. Remind students that only one small section of the wheel contacts the road, and we are modelling this as a single point, with the wheel drawn on as a tangent so we can clearly see what direction it is rolling.

Finding Relationships Between the Lengths

Ask students to look for relationships between the different lengths and angles in their diagrams (Slide 9). This will involve Pythagoras' Theorem (for all diagrams) and/or sine and cosine ratios (possible for Version 1, using the wheel angle). Students can confirm the relationship/s they find using the measurements they have taken.

- Encourage students to look for any useful geometric features.
- They may want to redraw their diagrams, possibly to scale.
- The most important thing to find is the right angle between the bike body and the rear wheel radius. Previous discussion of the centre of rotation should make this easier to find.
- To help students find the right angle, suggest that they draw the path radii from the centre to the point of contact of the wheel. The geometric result "the tangent to a circle is perpendicular to the radius at the point of contact" will be useful here if students have met it previously.
- The right angle enables us to use Pythagoras' theorem to find a relationship between the different lengths and angles in our model. For example, if we know the front wheel path radius and the wheelbase, we can calculate the rear wheel path radius and the 'cut-in' distance.
- The front wheel path radius is the hypotenuse. *Can the rear wheel path radius ever be as long as this?* (No.) Students should be able to see that this means that there will always be a 'cut-in' of the rear wheels.

Note: If a group did not find concentric circles in their experiment, or otherwise do not have enough data, they can use data from another group. This data will only be used very briefly in the next lesson.

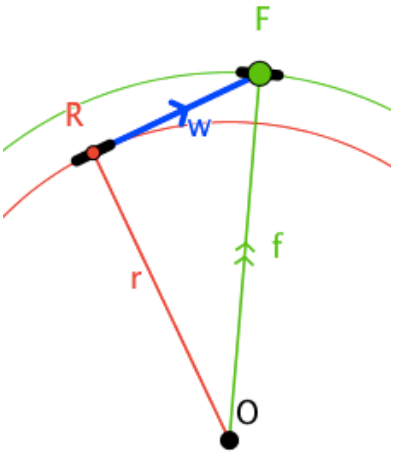

Version 2 Radius Experiment

A diagram (a snapshot from next lesson's dynamic geometry model) showing the wheelbase (*w*), and the front and rear wheel path radii (*f* and *r*).

Triangle FRO is a right-angled, giving:

$r^2 = f^2 - w^2$

Cut-in distance = $f - r$

Students will be able to substitute their measured value of *w* and experimental value of *f* to see if this model gives a similar *r* to their experimental value.

If desired, set up a spreadsheet to calculate the rear radius predicted by the model and compare it to class' data.

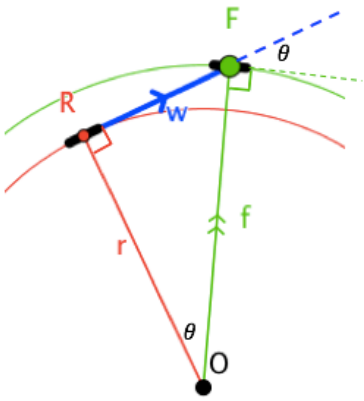

Version 1 Angle Experiment:

The path radii of the wheels only depends on the length of the wheelbase (*w*) and the angle of turn of front wheel, θ.

Angle FOR is equal to θ (exterior angle of a triangle is equal to sum of 2 interior angles). Hence values of *f* and *r* (and the cut-in distance) can be found using just *w* and θ.

$$\frac{w}{r} = \tan\theta \quad \text{and} \quad \frac{w}{f} = \sin\theta, \text{ so that}$$

$$r = \frac{w}{tan\theta} \quad \text{and} \quad f = \frac{w}{sin\theta}$$

If students are unfamiliar with sine ratios etc, they will need to use Pythagoras' Theorem instead, as above. This means using their measured front wheel path radius, f, instead of θ. This will not have quite the same impact, but will match with the main model used next lesson, which is based on Version 2.

The Modelling Cycle

Show slide 10: The Modelling Cycle

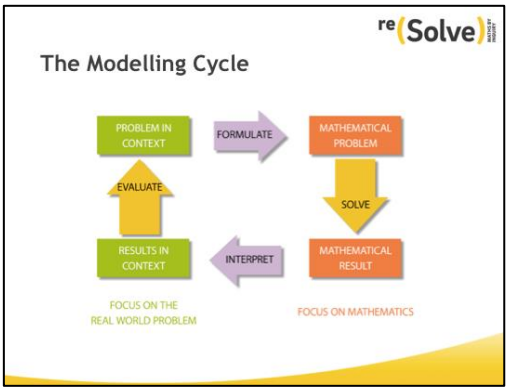

- *What modelling have we been doing in this lesson?*
- Relate the bicycle/scooter model to the real world situation of buses/trucks. *What do you now understand about the situation you have been investigating?*
- *What do you recommend so that cyclists/drivers or pedestrians are safe?*

Expected Student Responses

- In this lesson we have used a bicycle as a physical model to learn more about vehicles turning corners. Our experiments showed that the rear wheel of the bicycle 'cuts in' as it goes around a corner. We can apply this knowledge to buses and trucks.
- Our experiments helped us make a diagram to see the geometry of the situation. Then we used our mathematical knowledge to find relationships between the lengths and angles in our model. These

relationships matched the data from our experiments pretty well, so we think this mathematical model is going to be useful, i.e. will give us good insights into the real situation.

- The bicycle in the experiment is like the 'inside' front and back wheels of the truck or bus (and also like the 'outside' front and back wheels)
- The rear wheels of long vehicles "cut the corner", because the radius of the circular arc travelled by the rear wheels is smaller than that travelled by the front wheels.
- We can predict how far the rear wheels will 'cut-in' if we know the length of the wheelbase and the radius of the front wheel path (or better, the wheelbase and the angle through which the handlebars are turned).
- Drivers and cyclists need to avoid being 'on the inside' when long trucks turn corners.
- Pedestrians shouldn't stand too close to the kerb when long vehicles turn corners on narrow roads or roundabouts.
- Roads and lanes need to be wide enough for vehicles to turn around corners safely.

Looking ahead

Next lesson, students will be using dynamic geometry models with variable lengths to further explore the situation:

- Testing how different factors affect the cut-in distance.
- Inputting the wheelbases of real vehicles, and the radii of real roundabouts.

Bicycle Experiment

Name: _____

AIM: To describe the space (size and dimensions) covered by a turning (2-wheel) vehicle.

VERSION 1: Turn the front wheel by a fixed amount (if possible tape it so that the angle cannot change), then walk the bike (in the direction of the front wheel) and see where the rest of the bike travels.

VERSION 2: Draw an arc on the ground in chalk. Place the front wheel on this arc, then walk the bike around, keeping the front wheel on the arc, and see where the bike goes.

- Write down whether you are doing Version 1 or Version 2.
- Have a quick go, to see what happens, and to check how much room you will need.
- Think about how to make the experiment more accurate.
- What will you be measuring?
- Write out the steps for your experiment, then perform it and take your measurements.
- Make a diagram that clearly shows the space covered by your turning vehicle.

Mathematics by Inquiry is an initiative of, and funded by, the Australian Government Department of Education and Training

Australian Academy of Science